Fig. 18 - Vacuum Fan Kit, Single

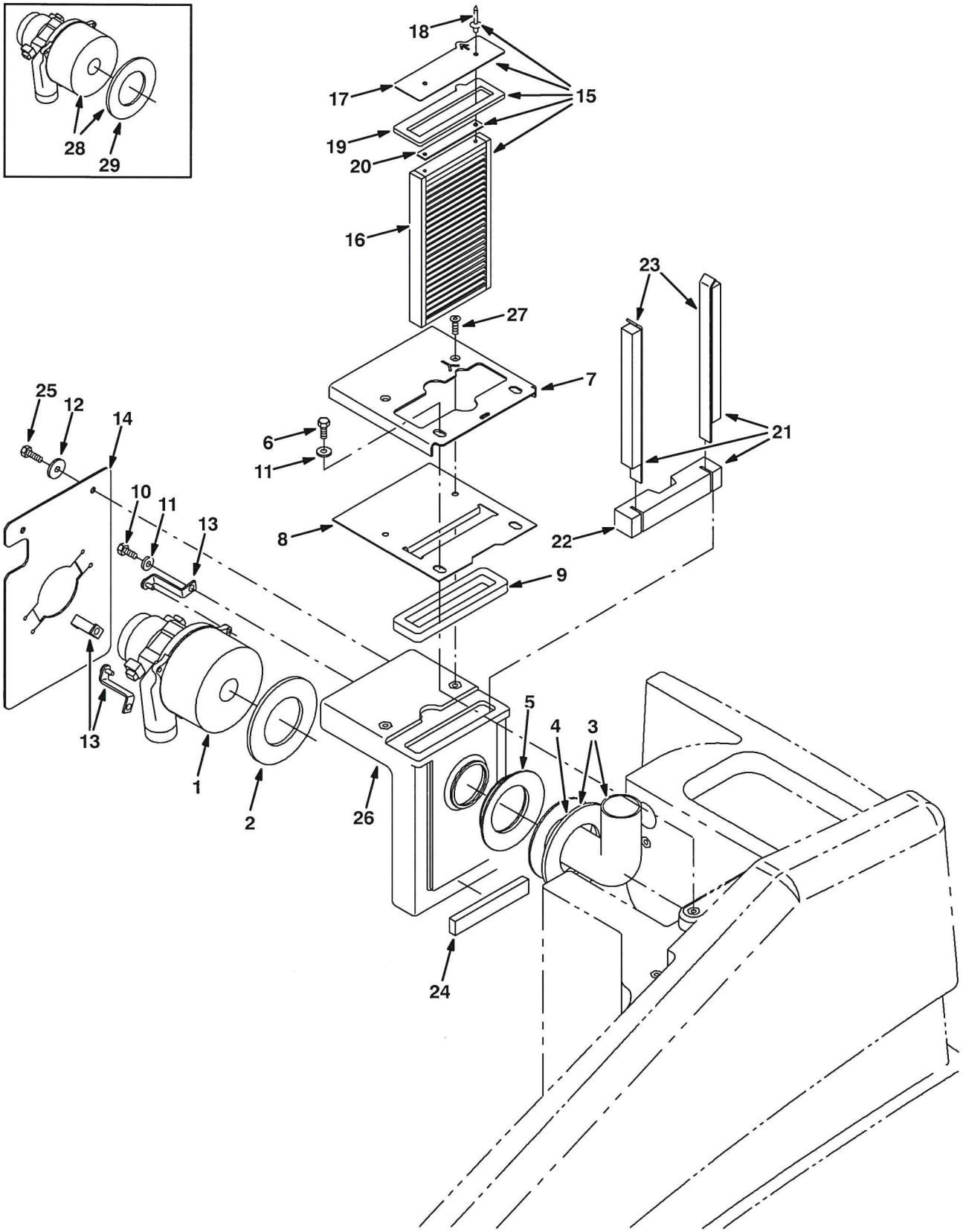
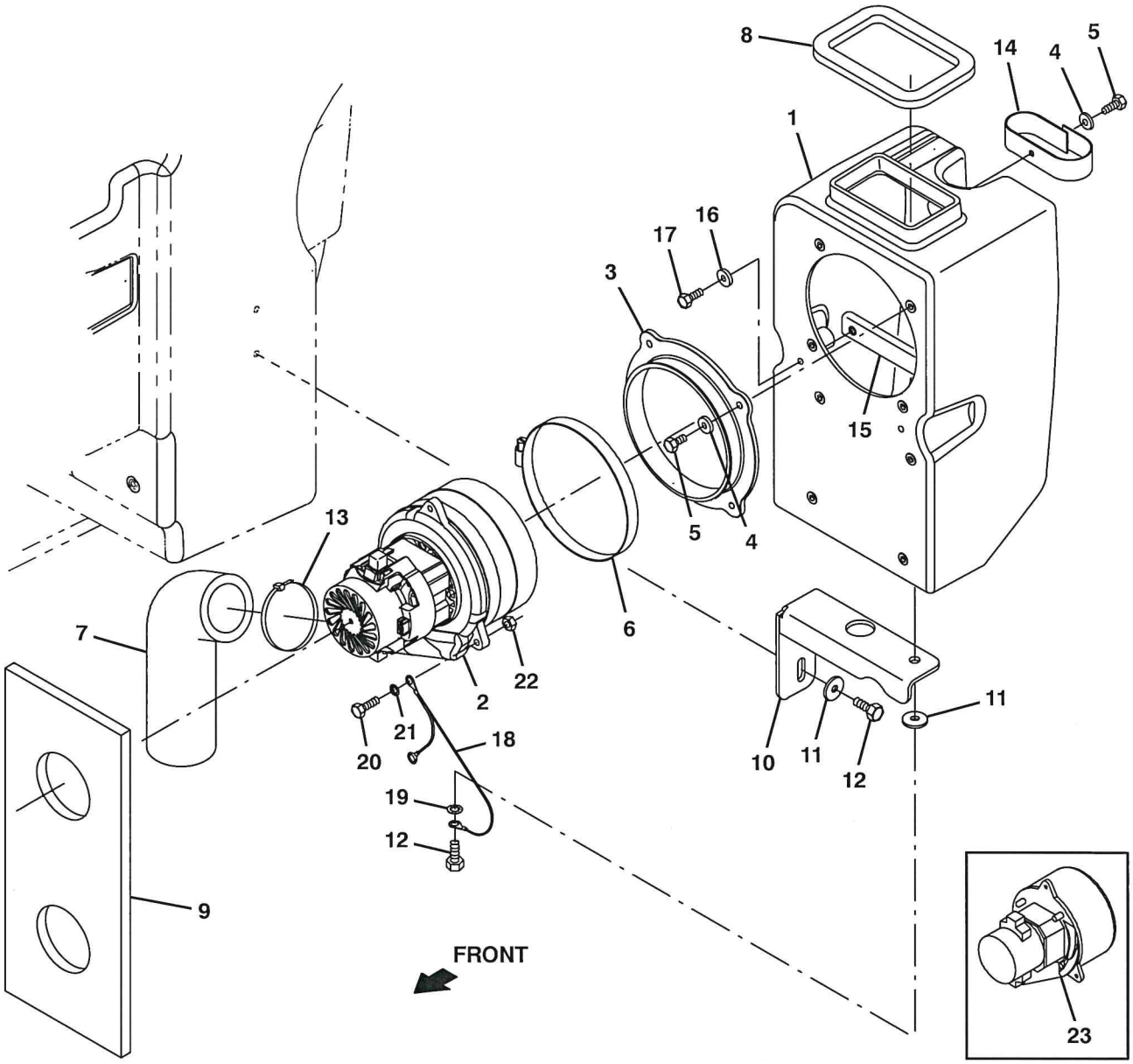
Fig. 17 – Vacuum Fan Kit, Single