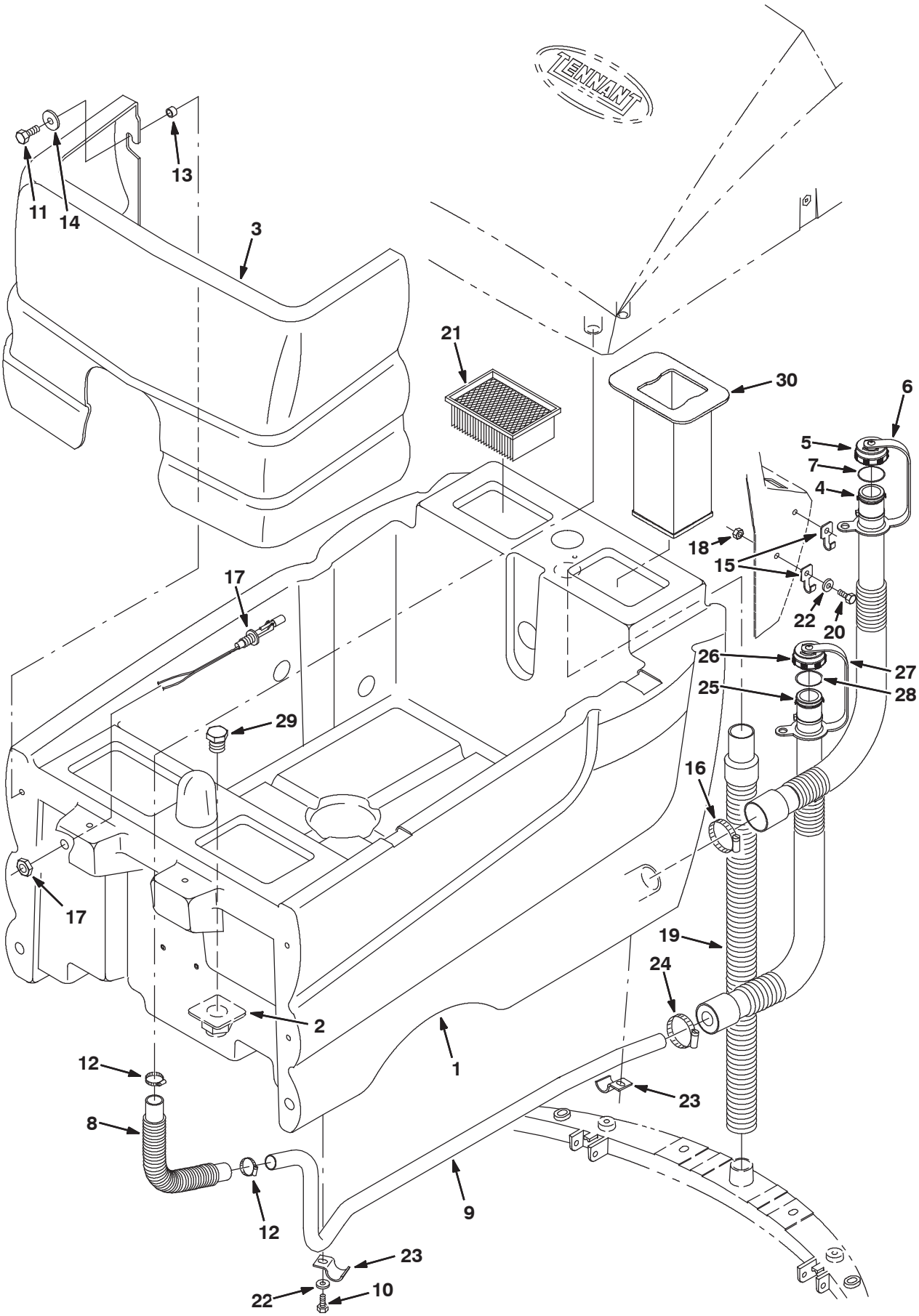Fig. 16 - Recovery Tank Group (S/N 01000-)