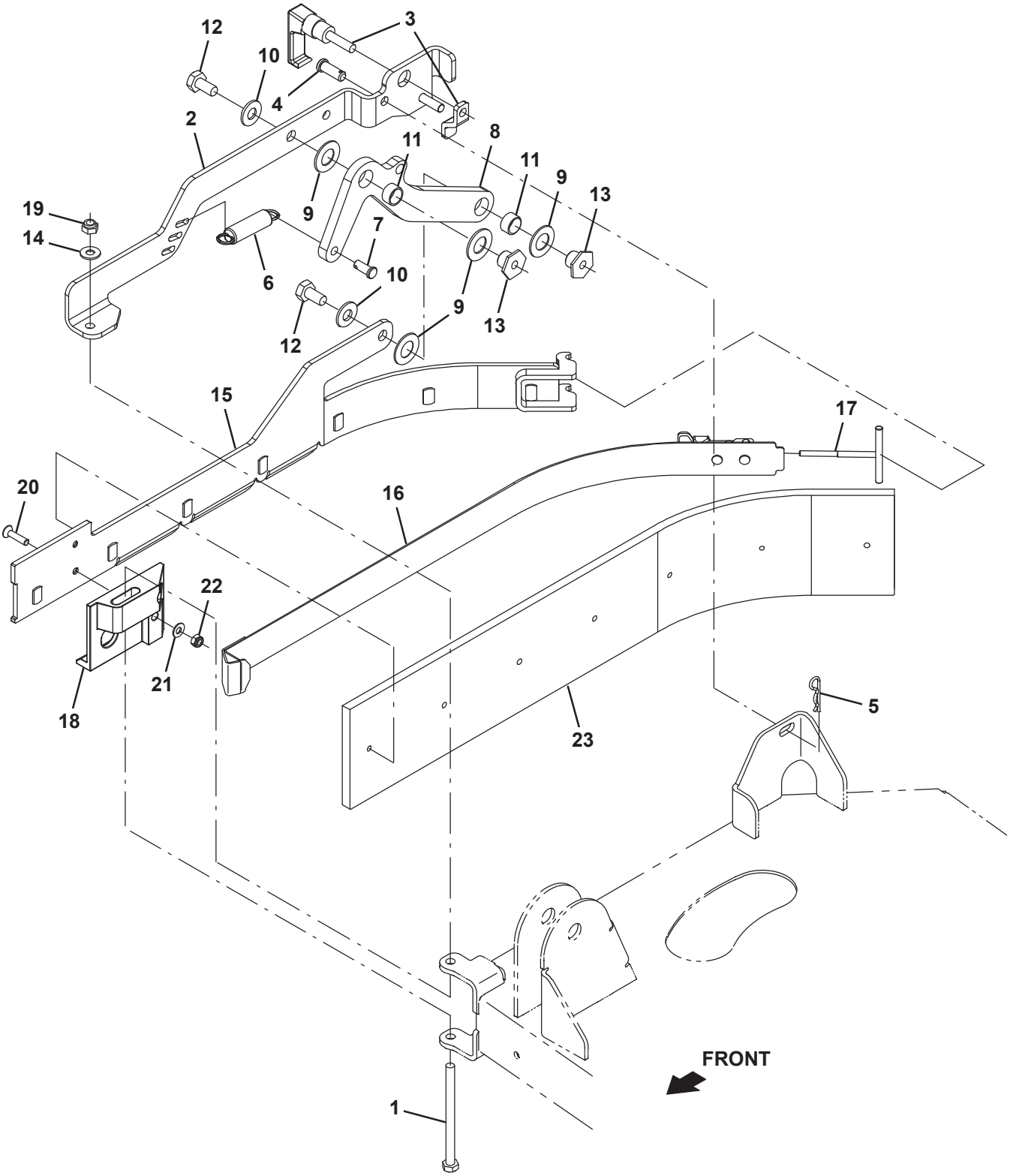Fig. 14 − Scrub Head Side Squeegee Group, Right Hand