Squeegee assembly

BA 410
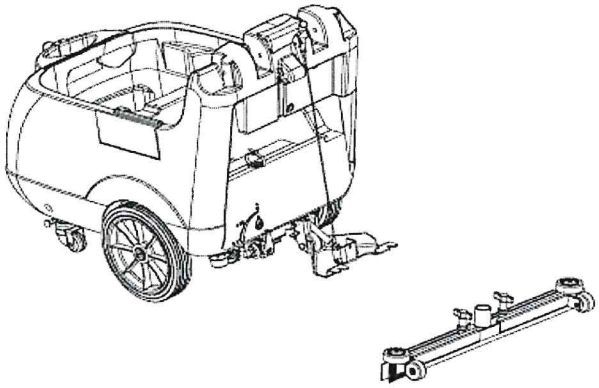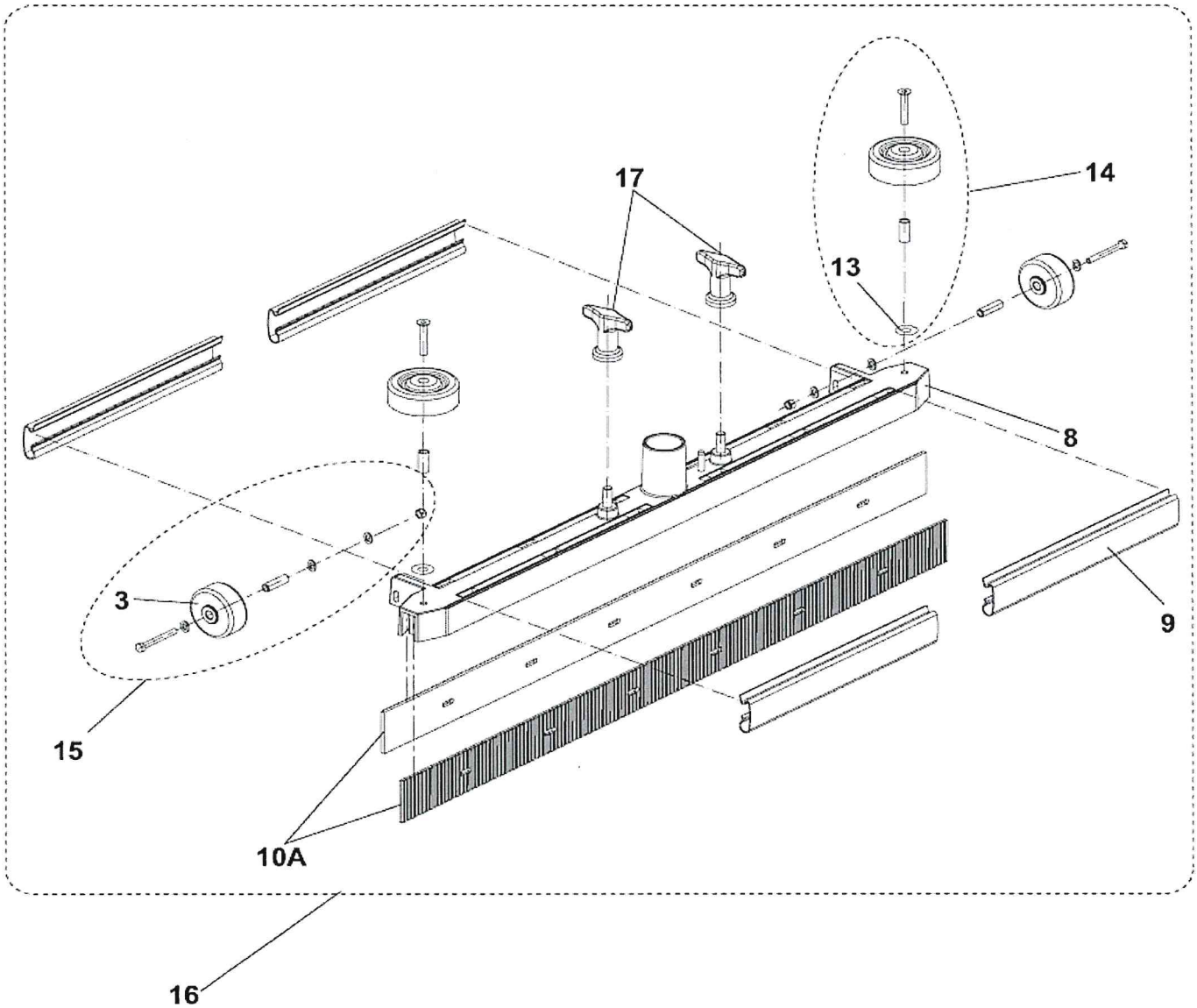
11-04-2010	
Part List ID	E79115
15